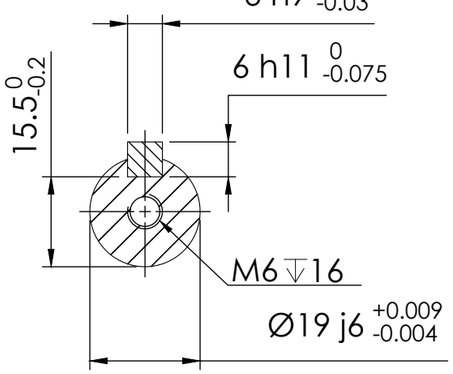

SECTION A-A
SCALE 2 : 1

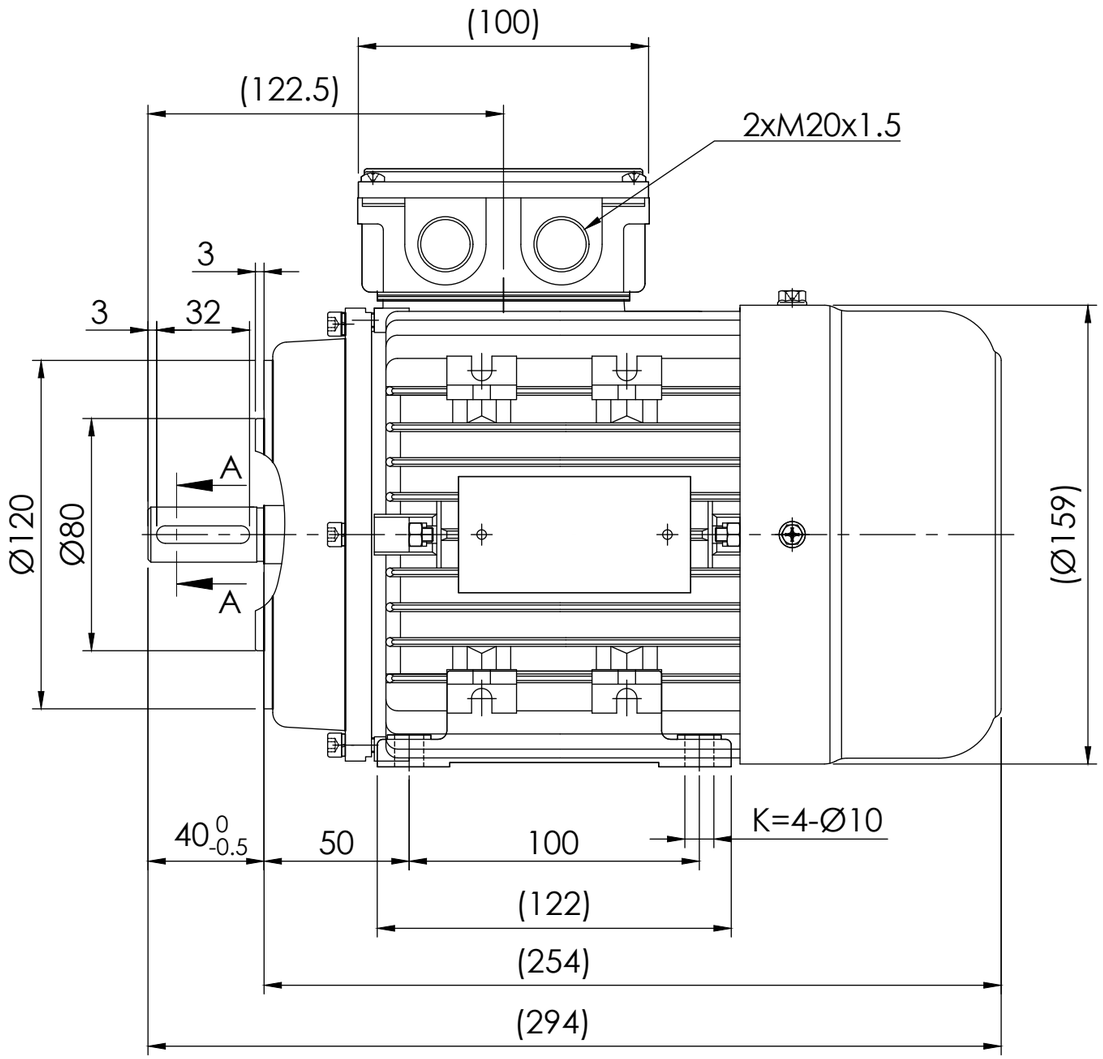

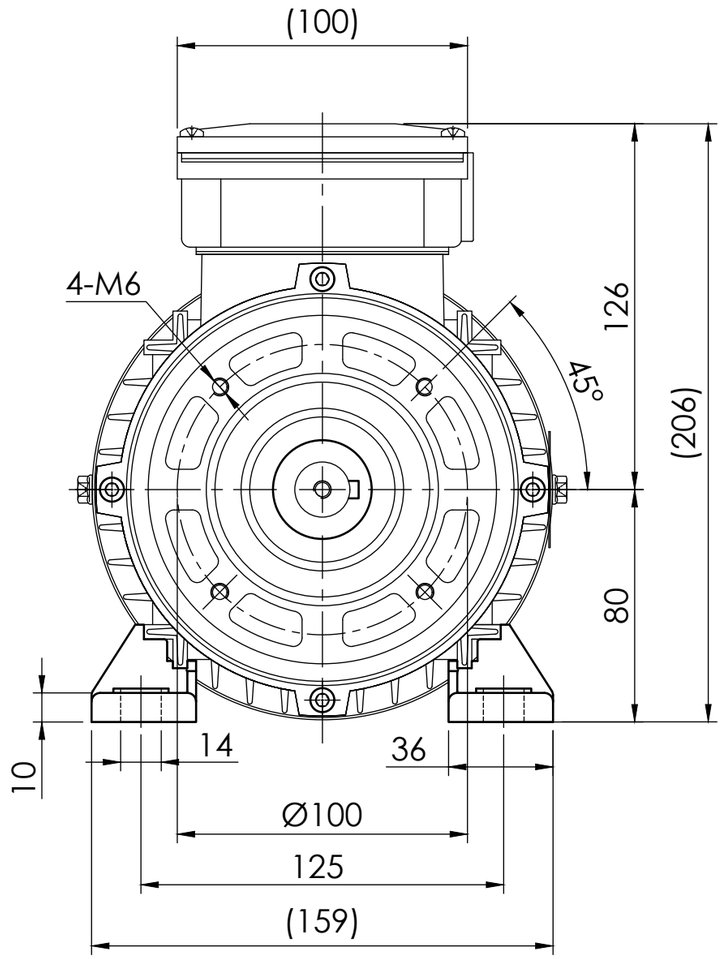

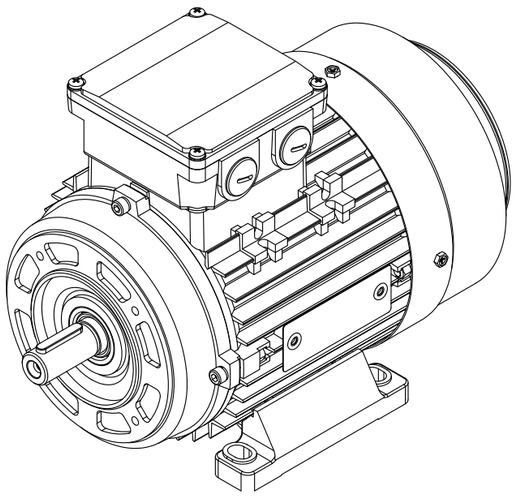

Note:
1.All dimensions are in mm
2.Tolerances not informed on the drawing according to the mounting tolerance table.

Mounting tolerance	
Dimensions range	Tolerance
0<D≤400	±10
400<D≤1000	±20
1000<D≤2000	±30
2000<D≤4000	±35
4000<D≤8000	±40
Unit: mm	

HOYER
EXCEEDING EXPECTATIONS

Hoyer Motors
Over Hadstenvej 42, DK-8370 Hadsten
Tel : +45 86982111
Fax: +45 86981779
www.hoyermotors.com

DEBUR AND BREAK SHARP EDGES

REV.	LOCATION	DESCRIPTION	DATE	RESP.	APPROVED
0	N/A	First issued	28/05/2024	L&T	Hoyer

Representation of the machine is illustrative only	Protection:	IEC 60034-5	Machined Part:	ISO 2768
Some features may not be represented	Dimension:	IEC 60072	Weld Constr:	ISO 8015
For installation or maintenance, consult operation manual	Tolerance:	ISO 286	Castings:	ISO 8062
	Key:	IEC 60072		

DRAWING NOT IN SCALE

OUTLINE DRAWING

TITLE:
HMA4-80 1-2p-B34

DWG NO.: TD-ID-D1078 A3

SCALE:1:1 | Weight: 11 kg | SHEET 1 OF 1

© 2010 Hoyer Motors All intellectual property rights and all rights in know-how in relation to this drawing may not be reproduced, stored, or transmitted in any form by any means (electronic, mechanical,photocopying, recording or otherwise) without the prior written consent of Hoyer Motors. It is to be used only for the purposes specified by Hoyer Motors and for no other purpose.