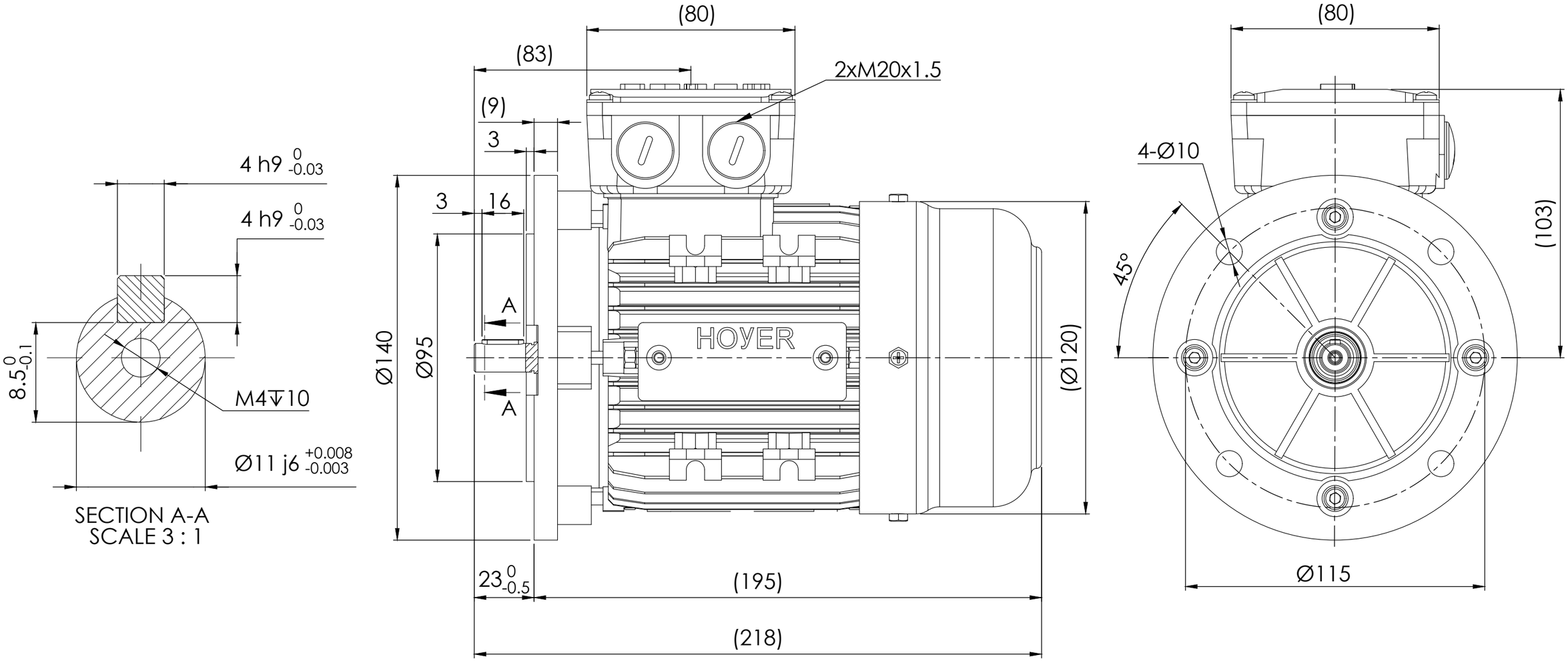


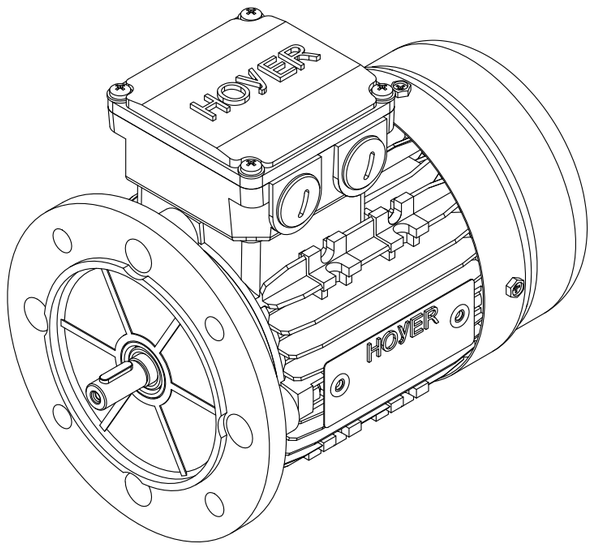


Note:
1.All dimensions are in mm
2.Tolerances not informed on the drawing according to the mounting tolerance table.

| Mounting tolerance | |
|---|---|
| Dimensions range | Tolerance |
| 0<D≤400 | ±10 |
| 400<D≤1000 | ±20 |
| 1000<D≤2000 | ±30 |
| 2000<D≤4000 | ±35 |
| 4000<D≤8000 | ±40 |
| Unit: mm | |

HOYER
EXCEEDING EXPECTATIONS

Hoyer Motors
Over Hadstenvej 42, DK-8370 Hadsten
Tel : +45 86982111
Fax: +45 86981779
www.hoyermotors.com

DEBUR AND BREAK SHARP EDGES

| REV. | LOCATION | DESCRIPTION | DATE | RESP. | APPROVED |
|---|---|---|---|---|---|
| 0 | N/A | First issued | 26/07/2024 | L&T | Hoyer |

DRAWING NOT IN SCALE

OUTLINE DRAWING

TITLE:
HMA2-63 1-4p-B5

Representation of the machine is illustrative only
Some features may not be represented
For installation or maintenance, consult operation manual

| | | | |
|---|---|---|---|
| Protection: | IEC 60034-5 | Machined Part: | ISO 2768 |
| Dimension: | IEC 60072 | Weld Constr: | ISO 8015 |
| Tolerance: | ISO 286 | Castings: | ISO 8062 |
| Key: | IEC 60072 | | |

DWG NO.: TD-ID-D2531 A3

SCALE:1:2 Weight: 4 kg SHEET 1 OF 1

© 2010 Hoyer Motors All intellectual property rights and all rights in know-how in relation to this drawing may not be reproduced, stored, or transmitted in any form by any means (electronic, mechanical,photocopying, recording or otherwise) without the prior written consent of Hoyer Motors. It is to be used only for the purposes specified by Hoyer Motors and for no other purpose.