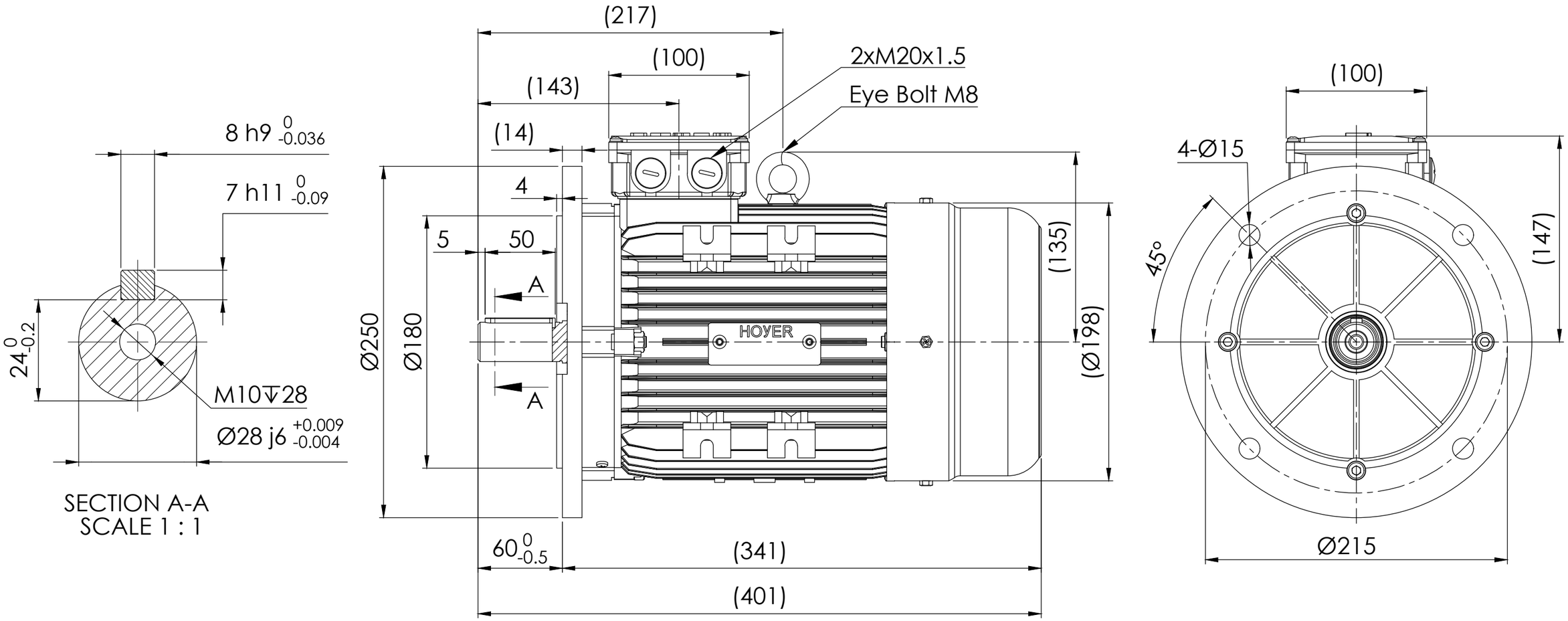

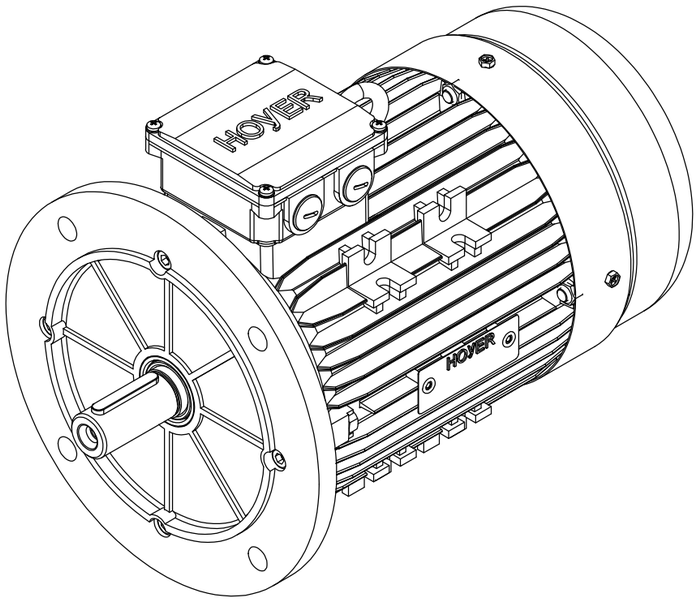

Note:
1.All dimensions are in mm
2.Tolerances not informed on the drawing according to the mounting tolerance table.

Mounting tolerance	
Dimensions range	Tolerance
0<D≤400	±10
400<D≤1000	±20
1000<D≤2000	±30
2000<D≤4000	±35
4000<D≤8000	±40
Unit: mm	

HOYER
EXCEEDING EXPECTATIONS

Hoyer Motors
Over Hadstenvej 42, DK-8370 Hadsten
Tel : +45 86982111
Fax: +45 86981779
www.hoyermotors.com

DEBUR AND BREAK SHARP EDGES

REV.	LOCATION	DESCRIPTION	DATE	RESP.	APPROVED
0	N/A	First issued	12/08/2024	L&T	Hoyer

DRAWING NOT IN SCALE

OUTLINE DRAWING

TITLE:
HMA2-100L2-4P-B5

Representation of the machine is illustrative only
Some features may not be represented
For installation or maintenance, consult operation manual

Protection:	IEC 60034-5	Machined Part:	ISO 2768
Dimension:	IEC 60072	Weld Constr:	ISO 8015
Tolerance:	ISO 286	Castings:	ISO 8062
Key:	IEC 60072		

DWG NO.: TD-ID-D2657 A3

SCALE:1:5 | Weight: 28 kg | SHEET 1 OF 1

© 2010 Hoyer Motors All intellectual property rights and all rights in know-how in relation to this drawing may not be reproduced, stored, or transmitted in any form by any means (electronic, mechanical,photocopying, recording or otherwise) without the prior written consent of Hoyer Motors. It is to be used only for the purposes specified by Hoyer Motors and for no other purpose.